9. KASKADNA I PARALELNA REALIZACIJA

Diskretno

$$H = \frac{B}{A} = \frac{\underbrace{B_1}_{H_1} \cdot \underbrace{B_2}_{H_2} \cdot \underbrace{B_3}_{H_3}}{\underbrace{A_1}_{H_1} \cdot \underbrace{A_2}_{H_2} \cdot \underbrace{A_3}_{H_3}} = \frac{B_3 \cdot B_2 \cdot B_1}{A_1 \cdot A_2 \cdot A_3}$$

izlaz

ulaz

Primjer: $H(z) = 5 \cdot \underbrace{\frac{1+z^{-1}+3z^{-2}}{1+2z^{-1}+2z^{-2}}}_{\text{izlaz} = \text{ulaz u ovu}} \cdot \frac{1+3z^{-1}+3z^{-2}}{1+4z^{-1}+8z^{-2}} \cdot \frac{1-2z^{-1}+5z^{-2}}{1+6z^{-1}+18z^{-2}}$

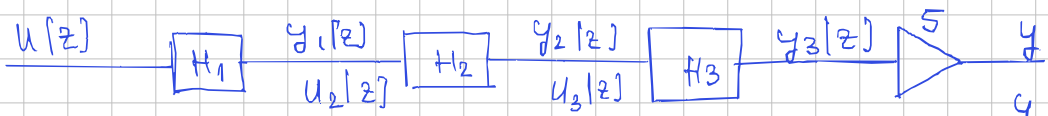

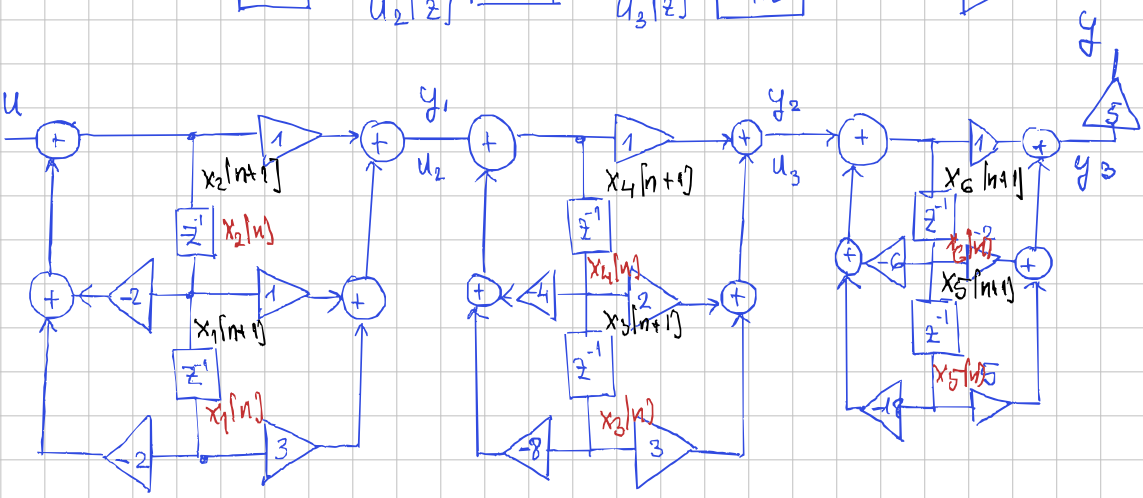

$x_1[n+1] = x_2[n]$

$x_2[n+1] = 1 \cdot u - 2x_2[n] - 2x_1[n]$

$y_1[n] = x_2[n+1] + x_2[n] + x_1[n] \cdot 3$

$y_1 = u - 2x_2[n] - 2x_1[n] + x_2[n] + 3x_1[n] = x_1 - x_2 + u = u_2$

$x_3[n+1] = x_4[n]$

$x_4[n+1] = u_2[n] - 4x_4[n] - 8x_3[n] = x_1 - x_2 - 8x_3 - 4x_4 + u$

$y_2[n] = x_4[n+1] + 3x_4[n] + 3x_3[n] = u_2 - 4x_4 - 8x_3 + 3x_4 + 3x_3$

$y_2 = -5x_3 - x_4 + u_2 = u_3 \rightarrow u_3 = -5x_3 - x_4 + x_1 - x_2 + u$

$x_5[n+1] = x_6[n]$

$x_6[n+1] = u_3 - 6x_6[n] - 18x_5[n] = x_1 - x_2 - 5x_3 - x_4 - 18x_5 - 6x_6 + u$

$y_3[n] = x_6[n+1] - 2x_6[n] + 5x_5[n] = u_3 - 6x_6 - 18x_5 - 2x_6 + 5x_5$

$y_3 = -13x_5 - 8x_6 + u_3 = -13x_5 - 8x_6 - 5x_3 - x_4 + x_1 - x_2 + u$

$y = 5y_3 = 5[-8x_6 - 13x_5 - x_4 - 5x_3 - x_2 + x_1 + u]$

$$\boxed{y[n] = 5x_1[n] - 5x_2[n] - 25x_3[n] - 5x_4[n] - 65x_5[n] - 40x_6[n] + 5u[n]}$$

$$\boxed{y[n] = 5x_1[n] - 5x_2[n] - 25x_3[n] - 5x_4[n] - 65x_5[n] - 40x_6[n] + 5u[n]}$$

$$x_1[n+1] = x_2[n]$$

$$x_2[n+1] = 1 \cdot u - 2x_2[n] - 2x_1[n]$$

$$x_3[n+1] = x_4[n]$$

$$x_4[n+1] = x_1 - x_2 - 8x_3 - 4x_4 + u$$

$$x_5[n+1] = x_6[n]$$

$$x_6[n+1] = x_1 - x_2 - 5x_3 - x_4 - 18x_5 - 6x_6 + u$$

$$\begin{bmatrix} x_1[n+1] \\ x_2[n+1] \\ x_3[n+1] \\ x_4[n+1] \\ x_5[n+1] \\ x_6[n+1] \end{bmatrix} = \overbrace{\begin{bmatrix} 0 & 1 & 0 & 0 & 0 & 0 \\ -2 & -2 & 0 & 0 & 0 & 0 \\ 0 & 0 & 0 & 1 & 0 & 0 \\ 1 & -1 & -8 & -3 & 0 & 0 \\ 0 & 0 & 0 & 0 & 0 & 1 \\ 1 & -1 & -5 & -1 & -18 & -6 \end{bmatrix}}^{A} \begin{bmatrix} x_1[n] \\ x_2[n] \\ x_3[n] \\ x_4[n] \\ x_5[n] \\ x_6[n] \end{bmatrix} + \overbrace{\begin{bmatrix} 0 \\ 1 \\ 0 \\ 1 \\ 0 \\ 1 \end{bmatrix}}^{B} u[n]$$

$$y[n] = \underbrace{\begin{bmatrix} 5 & -5 & -25 & -5 & -65 & -40 \end{bmatrix}}_{C} \begin{bmatrix} x_1[n] \\ x_2[n] \\ \vdots \\ x_6[n] \end{bmatrix} + \underbrace{5}_{D} u[n]$$